FIA FORMULA 1 WORLD CHAMPIONSHIP

2026 LAS VEGAS GRAND PRIX

19 - 21 November 2026

From	The FIA Formula 1 Media Delegate	**Document**	9
To	All Teams, All Officials	**Date**	19 November 2026
		Time	13:54

Title Car Presentation Submissions

Description Car Presentation Submissions

Enclosed 2026 Las Vegas Grand Prix - Car Presentation Submissions.pdf

Cameron Kelleher

The FIA Formula 1 Media Delegate

FIA FORMULA 1 WORLD CHAMPIONSHIP

Car Presentation – Las Vegas Grand Prix

McLaren Mastercard F1 Team

	Updated component	Primary reason for update	Geometric differences compared to previous version	Brief description on how the update works (min 20, max 100 words)
1	Floor Furniture	Performance - Flow Conditioning	New Board and Floor Edge	A new floor board has been designed in conjunction with floor edge and diffuser, aiming at improved flow conditioning and aerodynamic load.
2	Floor Furniture	Performance - Flow Conditioning	Modified Rear Floor Furniture	A small modification to the rear floor furniture, manipulating rear corner and diffuser flow with the aim of increasing aerodynamic efficiency.

FIA FORMULA 1 WORLD CHAMPIONSHIP

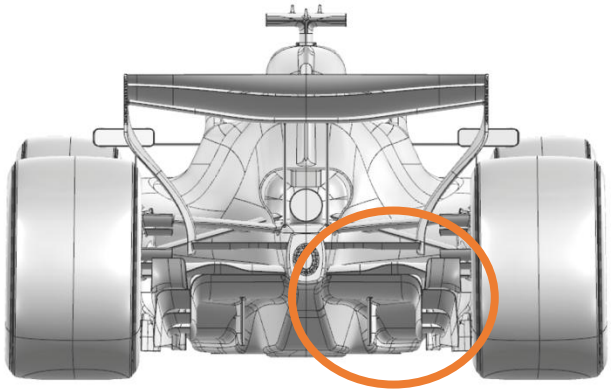

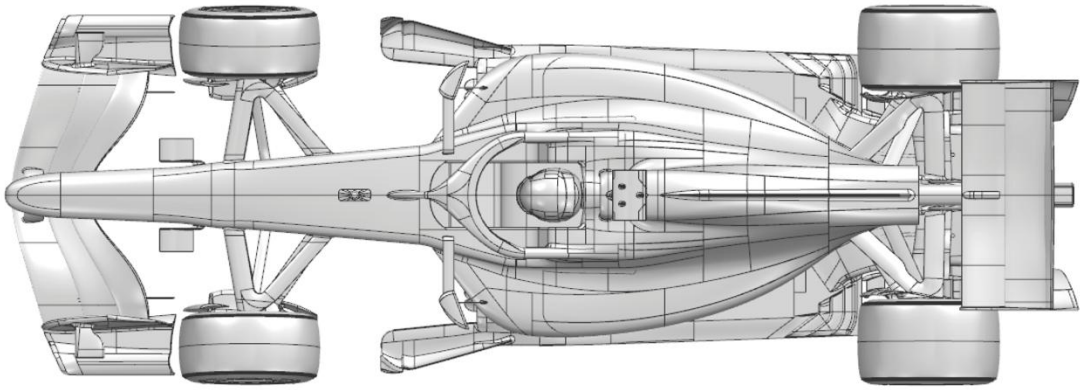

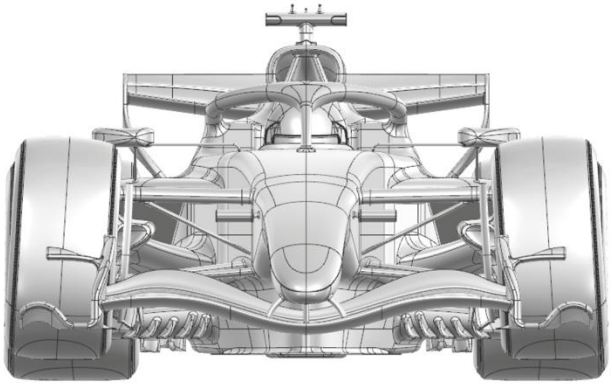

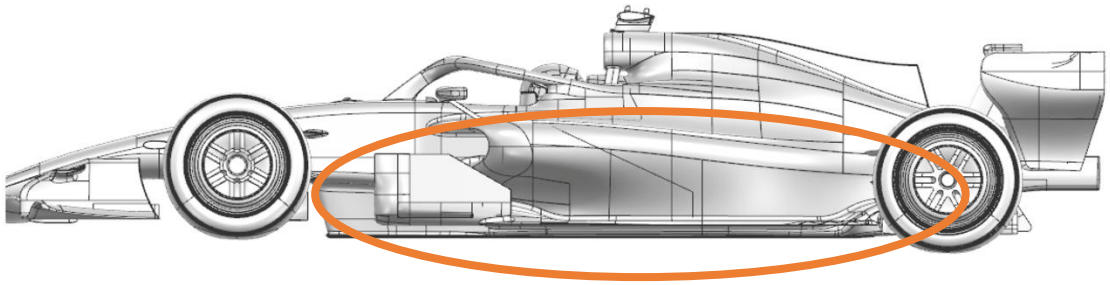

FIA FORMULA 1 WORLD CHAMPIONSHIP

Car Presentation – 2026 Las Vegas Grand Prix
Mercedes-AMG PETRONAS F1 Team

	Updated component	Primary reason for update	Geometric differences compared to previous version	Brief description on how the update works (min 20, max 100 words)
1	Rear Wing	Circuit specific - Drag Range	Various winglet devices removed from rear wing	Removing the rear wing winglets reduces assembly camber shedding local downforce and drag at a ratio appropriate for Vegas L/D.
2	Front Bodywork	Circuit specific - Drag Range	Mirror rear stay trim	The mirror stay trim reduces local camber and loading, shedding local downforce and drag at a ratio appropriate for Vegas L/D.
3	Rear Corner	Performance - Local Load	Rear corner winglets position and span	Rear corner winglets position and span optimised around local load requirements, shedding local downforce and drag at a ratio appropriate for Vegas L/D.
4	Engine Cover	Cooling Range	Narrower rear exit	A narrower rear exit allows more cooling range, appropriate for the lower cooling requirements of Vegas.

FIA FORMULA 1 WORLD CHAMPIONSHIP

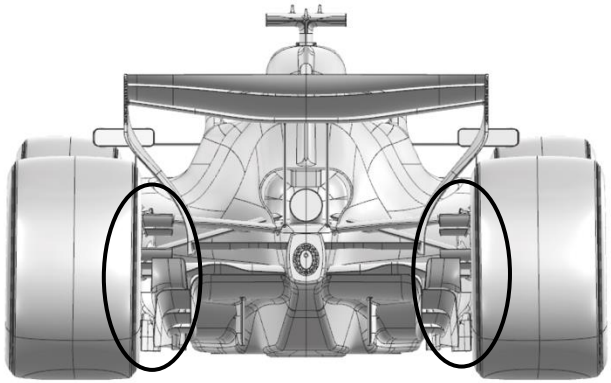

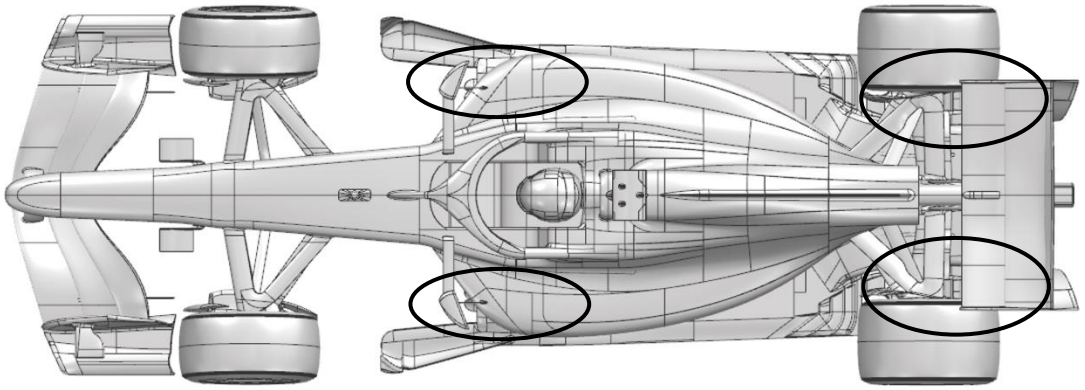

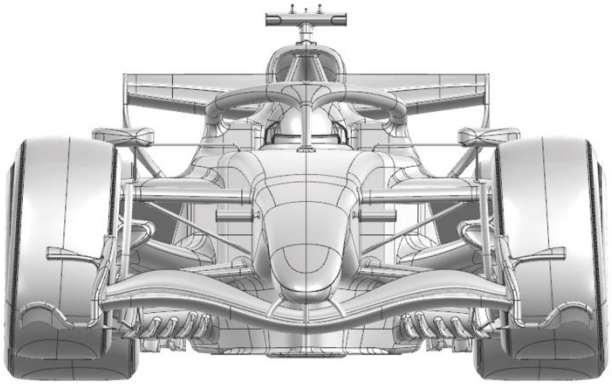

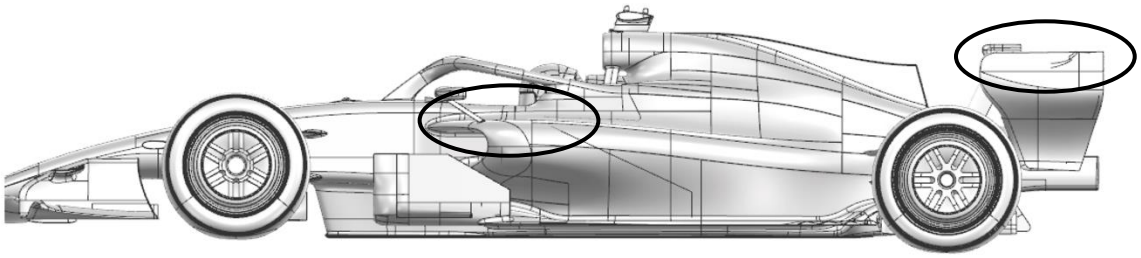

FIA FORMULA 1 WORLD CHAMPIONSHIP

Car Presentation – USA-Las Vegas Grand Prix

Oracle Red Bull Racing

	Updated component	Primary reason for update	Geometric differences compared to previous version	Brief description on how the update works (min 20, max 100 words)
1	Front Wing Endplate	Performance - Local Load	Re-positioned Front Wing Endplate Dive-plane	In order to better protect the flow stability of the front wing endplate footplate as well as surfaces downstream, the dive-plane has been lowered and reduced in chord length.

FIA FORMULA 1 WORLD CHAMPIONSHIP

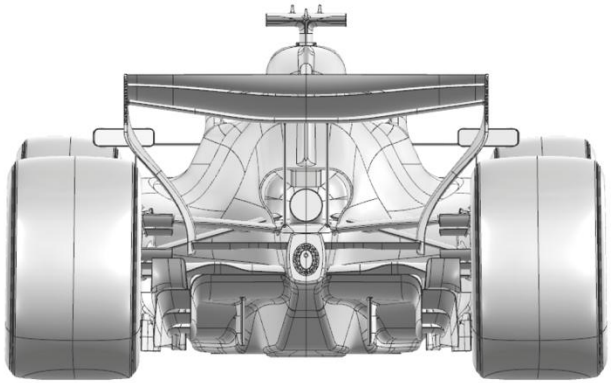

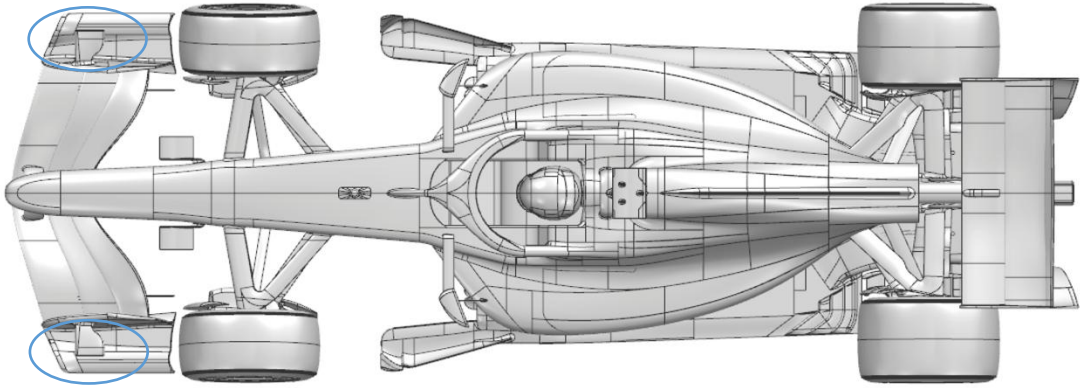

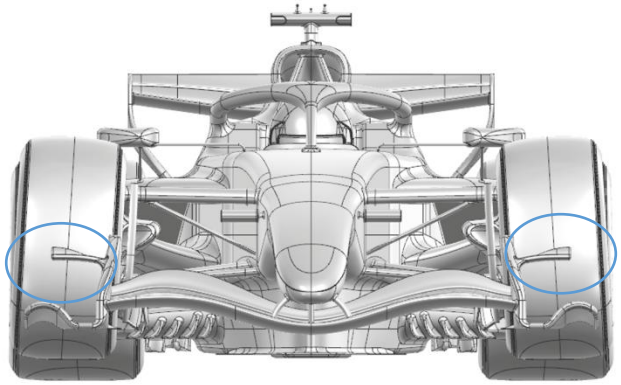

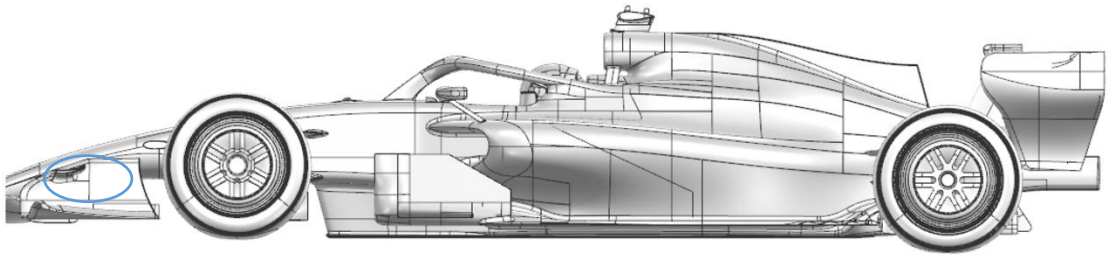

FIA FORMULA 1 WORLD CHAMPIONSHIP

Car Presentation – Las Vegas Grand Prix

Scuderia Ferrari HP

	Updated component	Primary reason for update	Geometric differences compared to previous version	Brief description on how the update works (min 20, max 100 words)
1	Floor Board	Circuit specific - Drag Range	Front floor board elements optimisation, single vertical element	The primary aim of these modifications has been to adapt to Las Vegas circuit peculiar characteristics and car aerodynamic efficiency requirements. It is targeting aerodynamic drag saving, coming along with downforce reduction as a natural consequence, but in a favourable ratio for this track.

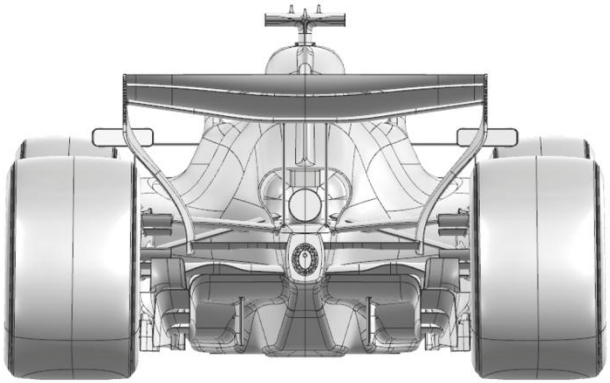

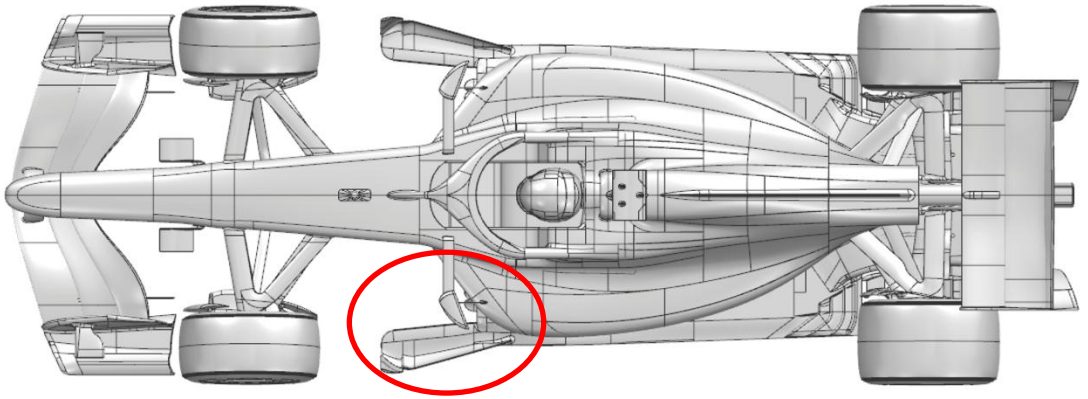

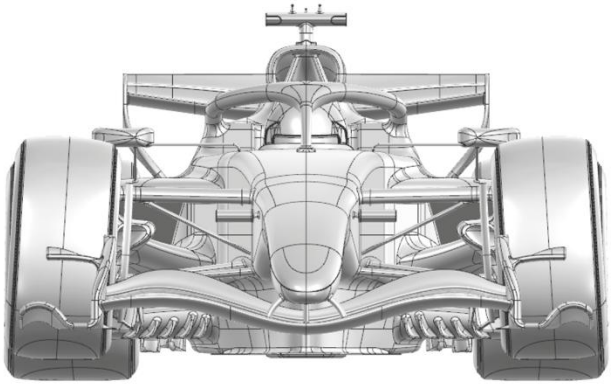

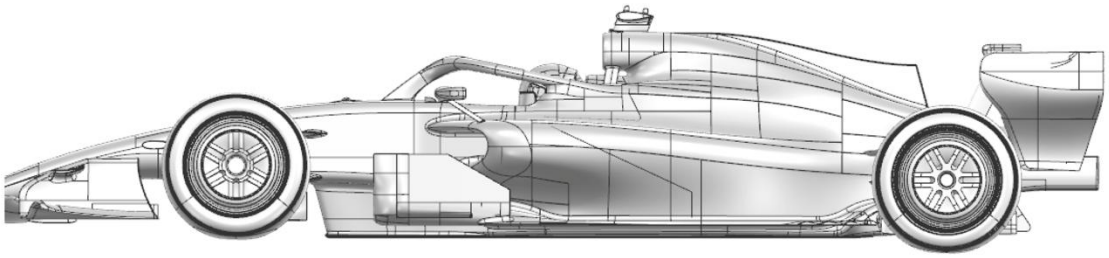

FIA FORMULA 1 WORLD CHAMPIONSHIP

Car Presentation – Las Vegas Grand Prix
Williams

No Updates

FIA FORMULA 1 WORLD CHAMPIONSHIP

Car Presentation – Las Vegas Grand Prix

Visa Cash App Racing Bulls

	Updated component	Primary reason for update	Geometric differences compared to previous version	Brief description on how the update works (min 20, max 100 words)
1	Floor Board	Circuit specific - Drag Range	Shorter chord board elements	A reduction in the amount of load generated by the Floor Board provides an improvement in overall efficiency and lap time around this circuit.
2	Rear Corner	Circuit specific - Drag Range	Modifications to drum winglets	An alternative winglet arrangement on the rear brake drums delivers an efficient load reduction, providing a net performance benefit at this track.
3	Front Wing	Circuit specific - Balance Range	Reduced chord & incidence flap	A low-balance front wing flap, featuring chord and incidence changes, is available for this circuit to reduce the load generated by the front wing and extend the available balance range.

FIA FORMULA 1 WORLD CHAMPIONSHIP

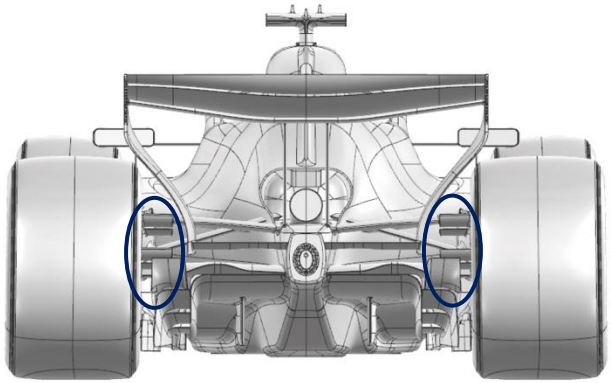

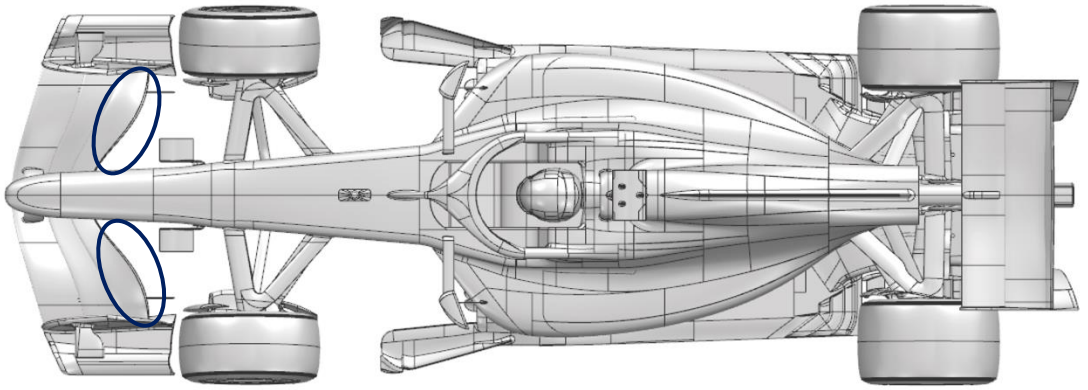

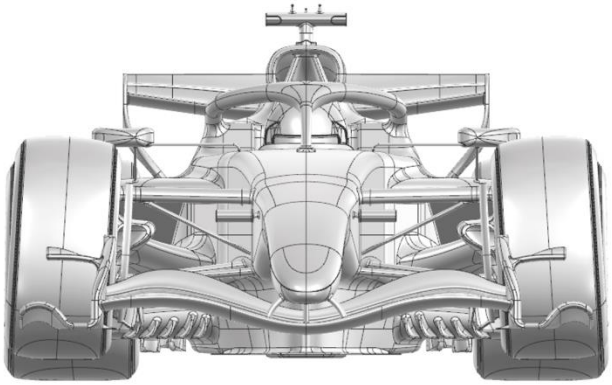

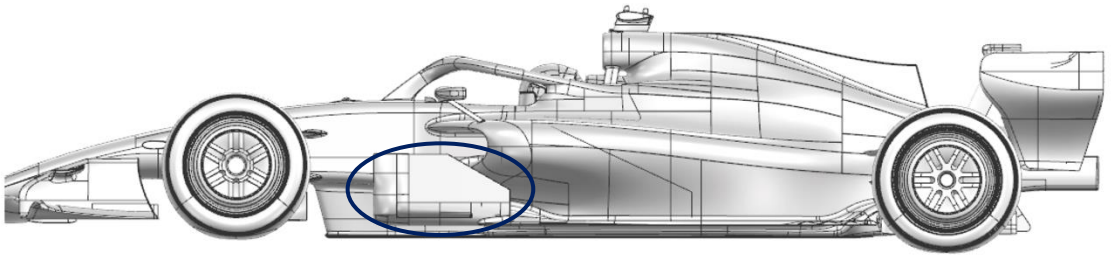

FIA FORMULA 1 WORLD CHAMPIONSHIP

Car Presentation – Las Vegas Grand Prix

Aston Martin Aramco F1 Team

No updates submitted for this event.

FIA FORMULA 1 WORLD CHAMPIONSHIP

Car Presentation – Las Vegas Grand Prix

TGR HAAS F1 Team

	Updated component	Primary reason for update	Geometric differences compared to previous version	Brief description on how the update works (min 20, max 100 words)
1	Rear Wing	Performance - Drag reduction	Revised rear wing arrangement associated with the Straight Mode mechanism	The revised arrangement is intended to evaluate an alternative rear wing Straight Mode deployment, with associated minor changes to accommodate the different configuration.

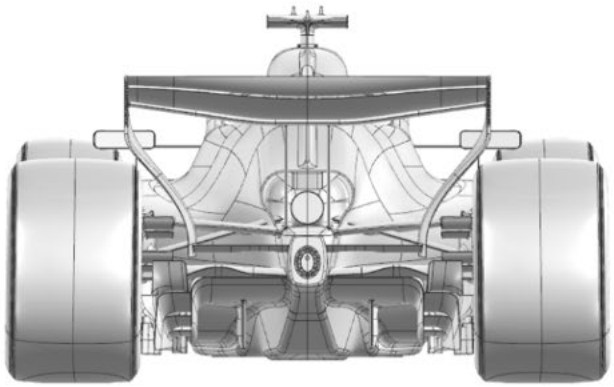

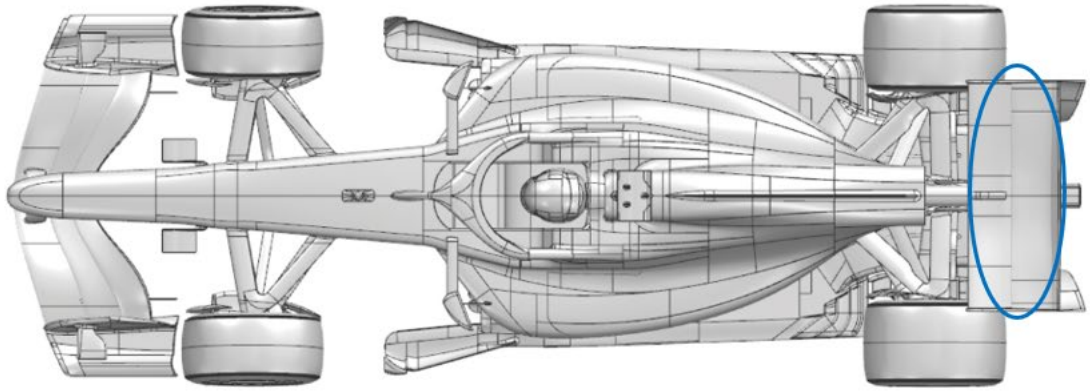

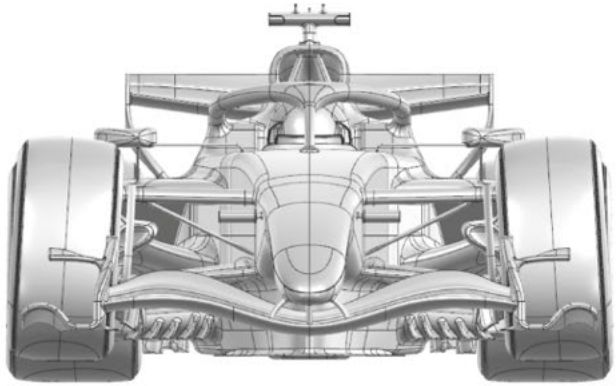

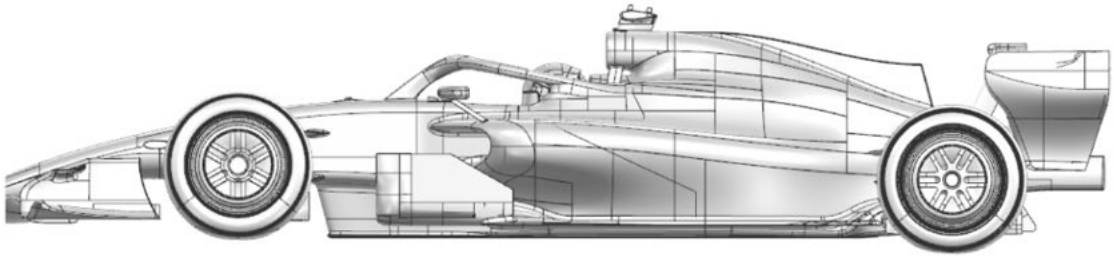

FIA FORMULA 1 WORLD CHAMPIONSHIP

Car Presentation – Las Vegas Grand Prix

Audi Revolut F1 Team

	Updated component	Primary reason for update	Geometric differences compared to previous version	Brief description on how the update works (min 20, max 100 words)
1	Rear Corner	Circuit Specific – Drag Range	Updated rear brake duct deflector	The revised rear brake duct deflector geometry was modified to match the specific aerodynamic efficiency requirements of the Las Vegas track.

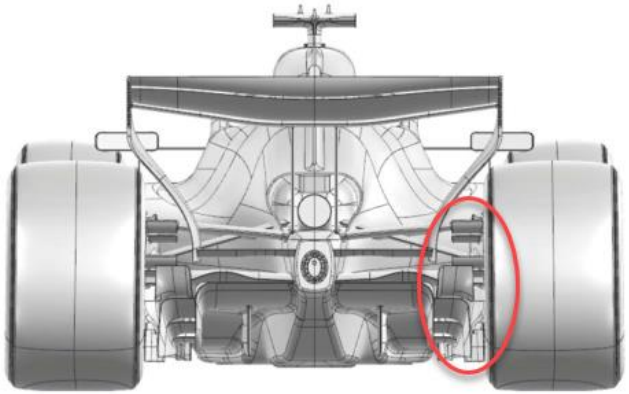

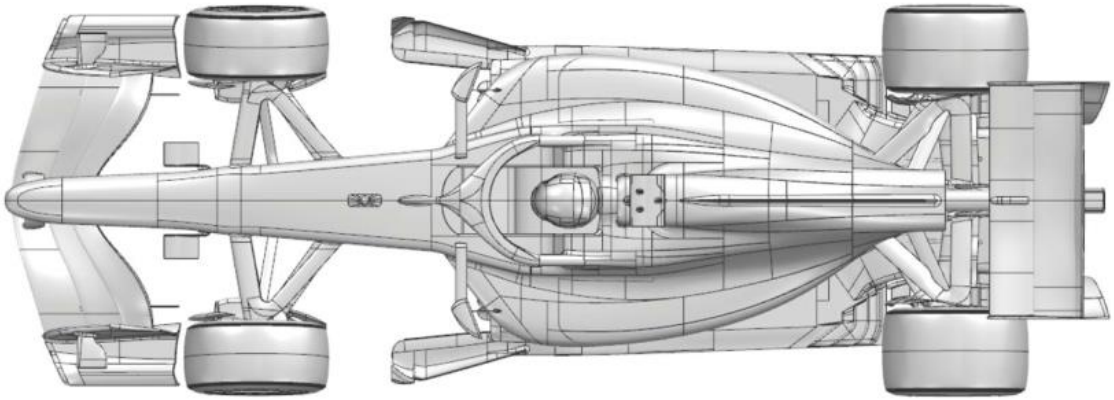

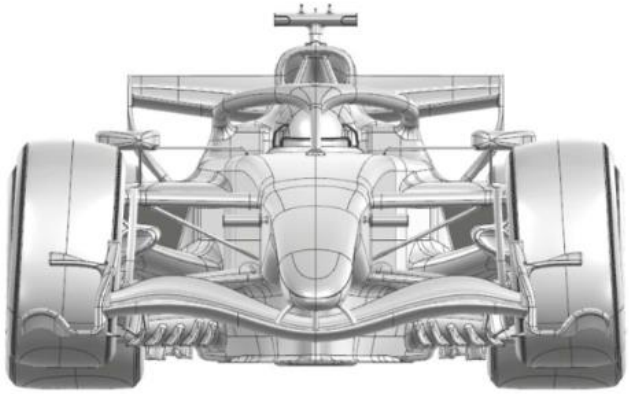

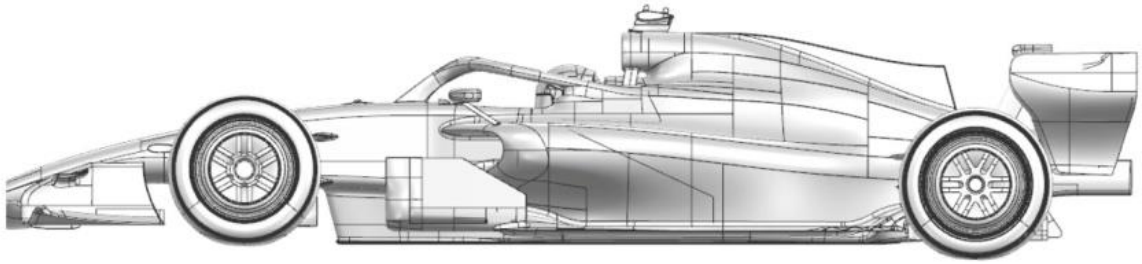

FIA FORMULA 1 WORLD CHAMPIONSHIP

Car Presentation – Las Vegas Grand Prix

BWT Alpine F1 Team

No updates submitted for this event.

FIA FORMULA 1 WORLD CHAMPIONSHIP

Car Presentation – Las Vegas Grand Prix
Cadillac

No updates for this event